Contents Inside Package

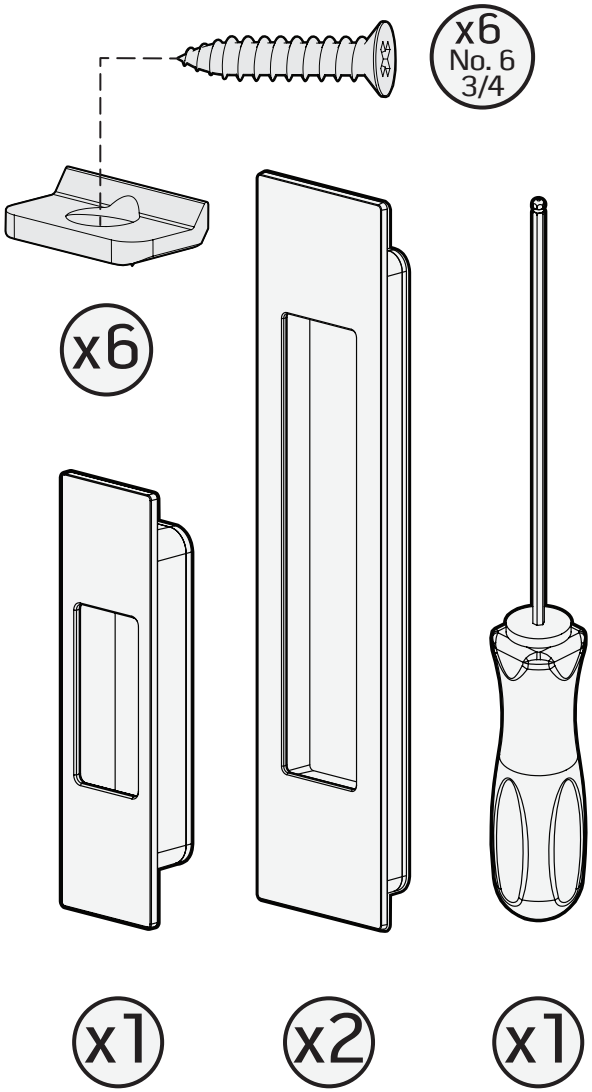

Please ensure you have received all the correct parts before installation. Mardeco International Ltd takes no responsibility for incorrect product being fitted.

Stainless Steel
Screws supplied by: HECO SCHRAUBEN Germany

m series™

Flush Pull Set

Installation Instructions

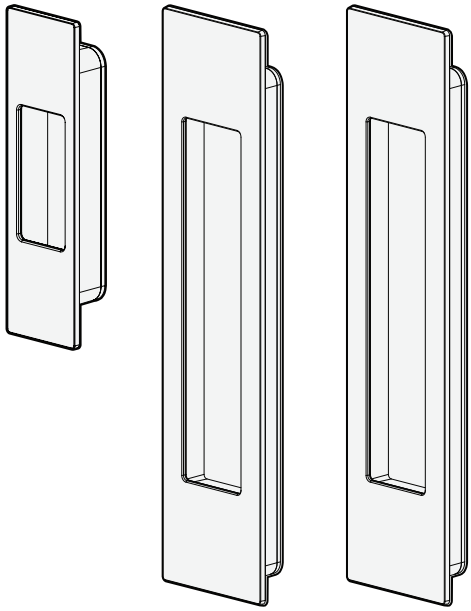

Mardeco International Ltd. retains the right to change products and specifications without notice.

Copyright © 2012 Mardeco International Ltd. All rights reserved. For full Terms & Conditions please visit our website.

www.mardeco.co.nz

Scan QR code to view a step by step installation video

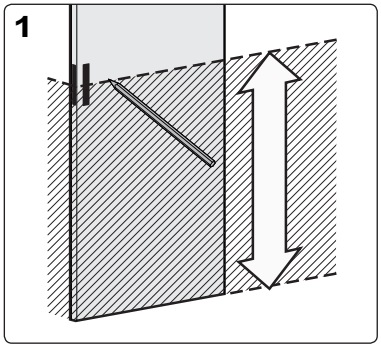

Mark midline on all 3 faces of the door. Choose a height that will be comfortable for all users to reach.

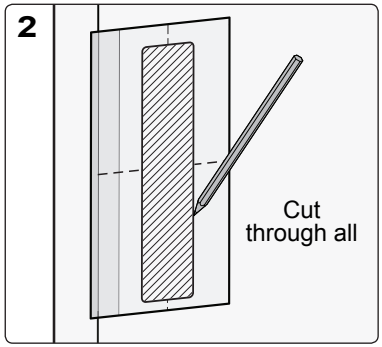

Wood Cutout: Remove middle section of flush pull template, position for desired backset and mark cutout outline. Use midline as height reference. Cut through all.

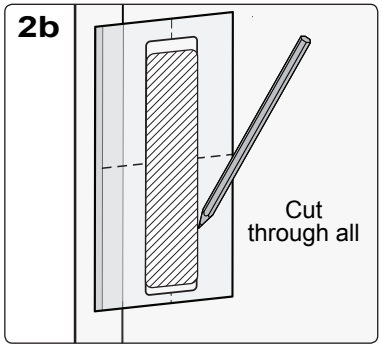

Aluminium Cutout: Match midline with template midline and position for desired backset. Mark aluminium cutout outline. Cut through all.

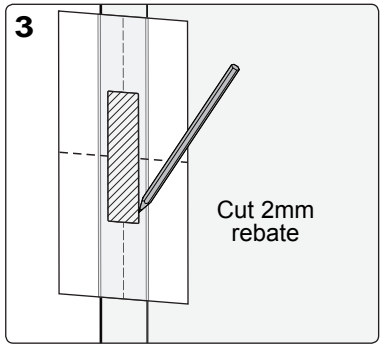

Remove middle section of end pull template and mark rebate outline on end of door. Use midline as height reference. Cut 2mm rebate.

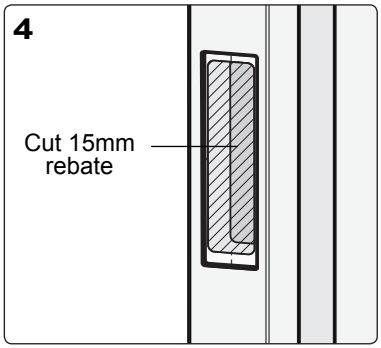

Place middle section of end pull template into rebate and mark 2nd rebate outline. Ensure it is the correct way up. Cut 15mm rebate

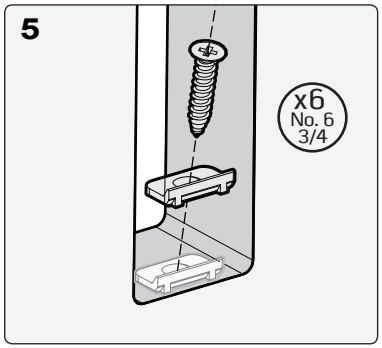

For wooden doors: install woodfix brackets at the top and bottom of cutout on both sides of the door, and on the end of the door. Six brackets total.

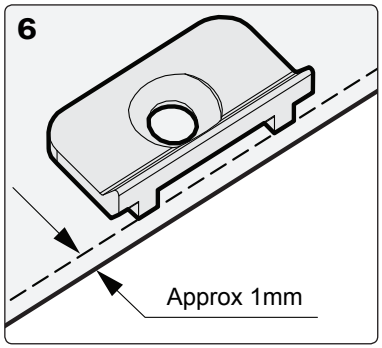

Fix brackets in centre of the cutout with the ridge facing outwards. Ensure that they are approx 1mm inside the edge and do not protrude.

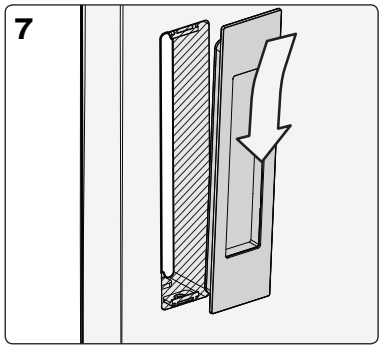

Insert flush pull into cavity. Push in and down so it grips onto the bottom bracket or edge.

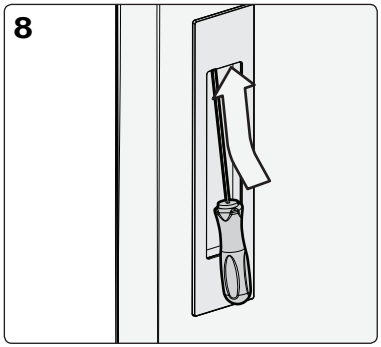

Use Mardeco hex tool to tighten grub screw inside top of flush pull. Ensure it is fitted firmly.

Repeat steps 7-8 for the other flush pull.

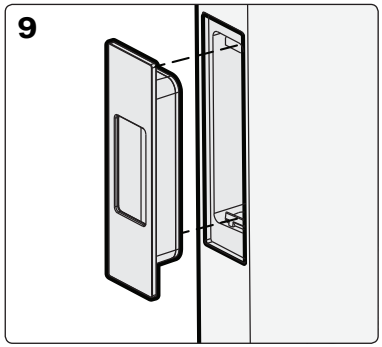

Insert end pull into cavity. Push in and down so it grips onto the bottom bracket or edge.

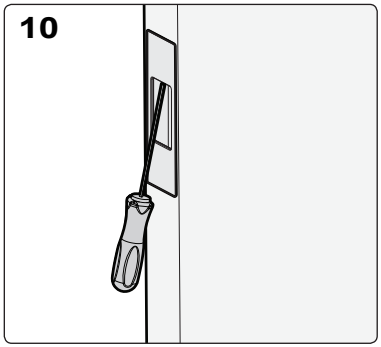

Use Mardeco hex tool to tighten grub screw inside top of end pull. Ensure end pull is fitted firmly.

Mardeco International Ltd.
PO Box 131
Whangaparaoa 0943
Auckland, New Zealand
Phone: +64 (0) 9 428 0658
Email: info@mardeco.co.nz
Web: www.mardeco.co.nz

mardeco®
international ltd
we handle the best