Install Activator into Door

Minimum door width 610mm (24”).

20. If door is installed, remove it from the track.
Doors 810mm (32”) or wider: Mark a centre line on the top edge of the door, then mark and drill holes as shown below.
Doors between 610mm and 810mm (24” - 32”): offset the centre line 100mm (4”) away from the soft close end of the track. Mark and drill holes as shown.

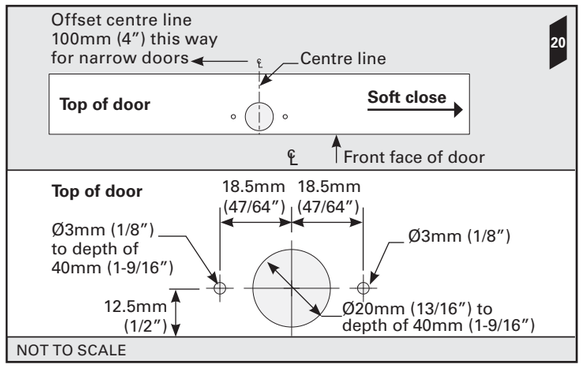

21. Check activator head is flush with the bolt. This is necessary in order to reconnect the door to the track.

Screw activator to top of door using supplied screws.

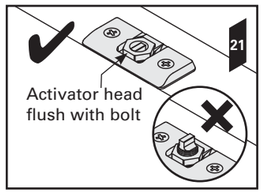

Continue with track installation (Step 15, Page 3)

Position SofStop cassette:

Install door on the track then follow **Option A** or **B**.
Note: Cassette can be installed charged or uncharged.

Option A:
Open track ends method.

22. Loosely connect the rivnut plates to the SofStop cassette using the supplied washers and M5 socket head screws.

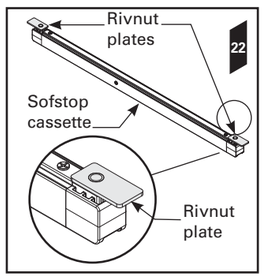

23. Align rivnut plates of the assembled SofStop cassette with the groove on the underside of the track. Check SofStop dampener is in the correct orientation and slide the cassette down the track.
Go to step 25.

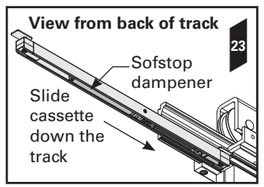

Option B:
Limited space on end of track.

24. If there is limited space, slide one rivnut plate into grooved slot on underside of track.

Attach second rivnut plate loosely on the opposite end of the cassette.

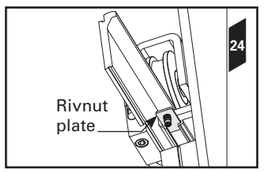

24. Check SofStop dampener is in the correct orientation and slide the cassette down the track.

Align cassette with the first rivnut plate and loosely screw plate to the cassette.

Align Unit and Test.

25. Close door.

Slide SofStop cassette to align activator head with the unit claws.

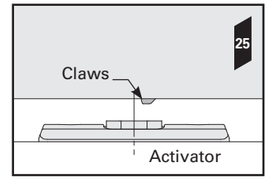

Open door and tighten screws on rivnut plates to lock SofStop in position.

26. Close door and use lifting tool to pick up activator nut, then slide tool under the nut.

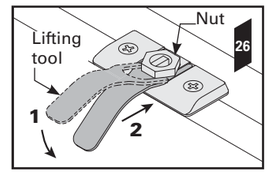

27. Use supplied spanner to raise activator head to its marked position by tightening the nut.

NOTE: Check that activator head is high enough to interact with claws of SofStop unit.
Keep tightening if head is not tall enough.

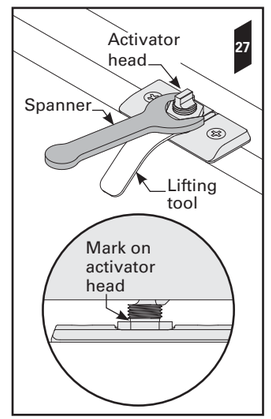

28. Pull lifting tool out to drop nut back into seated position.

29. Test SofStop works by opening and closing the door. Check that the unit won’t slide out of position if the door is closed faster than usual.

Adjust or tighten if necessary.

> **! Check door is stopping on the Stop, not the SofStop mechanism.**

NOTE:
- If the unit doesn’t activate, the activator head is not tall enough. **Repeat Steps 26 - 27 to adjust.**
- If the door does not close to the desired position repeat **Step 25.**

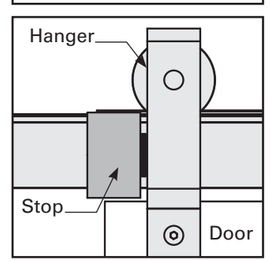

30. For units requiring Soft Open <u>and</u> Soft Close, repeat steps above to install a SofStop cassette at the other end of the track. Only one activator is required on the door.

CavitySliders™

5 - 7 Rakino Way
Mt Wellington
Auckland 1060
csfordoors.co.nz

1/7-11 Rodborough Rd
Allambie Heights
NSW 2100
cavitysliders.com.au

548 Finney Ct,
Gardena, 90248 CA
USA
cavitysliders.com

NEW ZEALAND MADE

WE GUARANTEE PRODUCT WITH OUR SERIAL CODES FOR UP TO TEN YEARS*

All copyright and other property in this document is reserved by Cavity Sliders Ltd. Details and specifications are subject to change without notice. Whilst all care is taken to ensure the accuracy of all information, no responsibility will be accepted for any errors or omissions.
*Guarantee conditions apply. Contact Cavity Sliders Ltd for details.

TrackSystems™ Installation Instructions BarnDoorTrack™

Before You Start:

CS Barn Door Track is suitable for surface sliding applications where there is enough strength in the wall to mount a track above the doorway. Ensure the stud wall is level and solid enough to support the door weight.

This track is supplied with coach screws suitable for use with timber framing. For fixing to concrete walls, masonry anchors must be used. You may need to open the existing holes to suit the type of masonry anchor you have selected.

Ensure that you have enough clearance above the door opening to mount the track bracket and hanger pins, and that there is adequate support for the weight of the door.

Maximum Weight Ratings

300 kg (650 lb) per track
90 kg (200 lb) per hanger
180 kg (400 lb) per door (2 hangers, non-SofStop)
100 kg (220 lb) per door (2 hangers, with SofStop)
Doors over 180kg (400lb) will require extra hangers or a customised solution.

Minimum Door Width (SofStop®)

Single (Soft Close): 610mm (24”)
Twin (Soft Open & Close): 810mm (32”)

Track & Bracket Orientation

The track bracket is shipped **upside down** due to shipping constraints. Unbolt the track from the bracket and install as per the diagram.

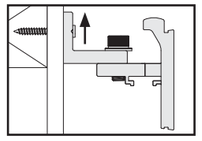

Determine overall thickness

1. This track system is supplied with either a **Narrow** or **Wide** track bracket which can be adjusted to suit an overall thickness of door + gap + architrave of:
40 - 61mm (1-5/8” to 2-3/8”) (Narrow option) or
62 - 80mm (2-3/8” to 3-1/8”) (Wide option).

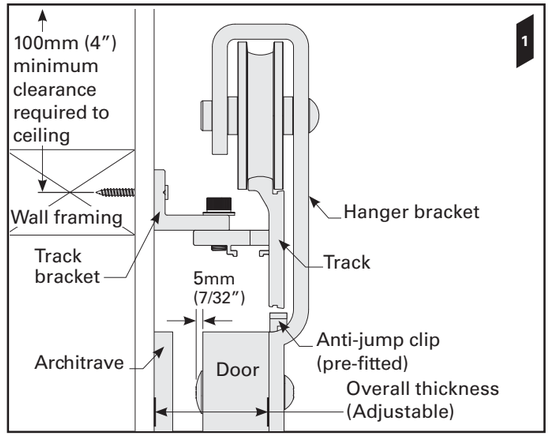

© Cavity Sliders Limited. **CS BARN DOOR TRACK™** (O.D. 2016). 61194/US / ZG00170 - 04.2023

Cut a groove in the bottom of the door

2. At the bottom of the door leaf cut a groove to the dimension and tolerance shown.
Make it central to the door thickness and absolutely straight.

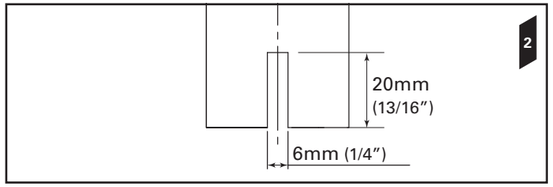

Mark position of track bracket and T-guide

3. Manually position the door in the desired ‘open’ position.
Mark position ‘**O**’ on the floor and wall as shown.

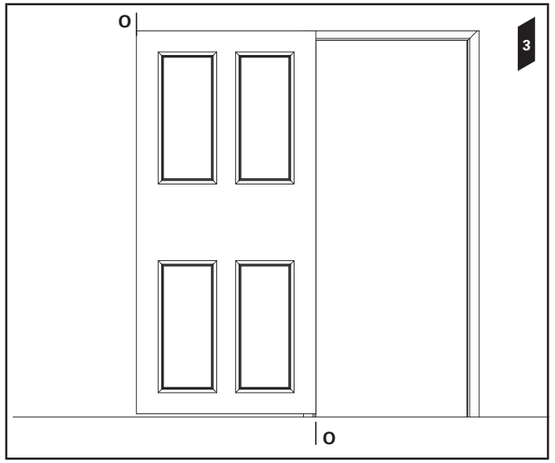

4. Manually position the door in the desired ‘closed’ position.
Mark position ‘**C**’ on the floor and wall as shown. Check that there is enough room between **O** and **C** to fit the T-guide. Reposition **O** or **C** if necessary.

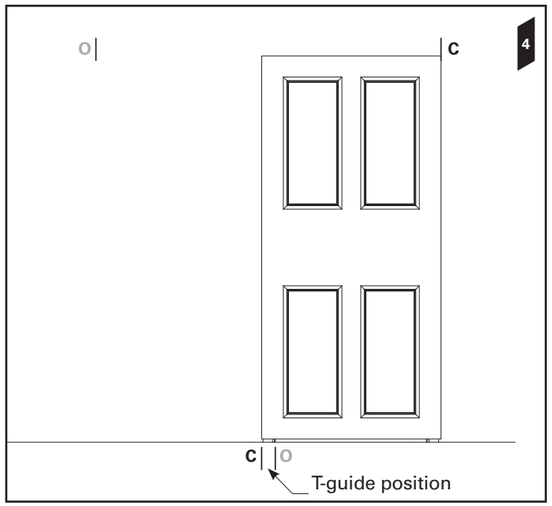

Go to page **2** (overleaf)

5. The mid point between position **O** and **C** above the door will be the centreline of the track (**X**).
Work out the fixing height (**H**mm above the finished floor level). Ensure there is enough clearance above the track to mount the door.

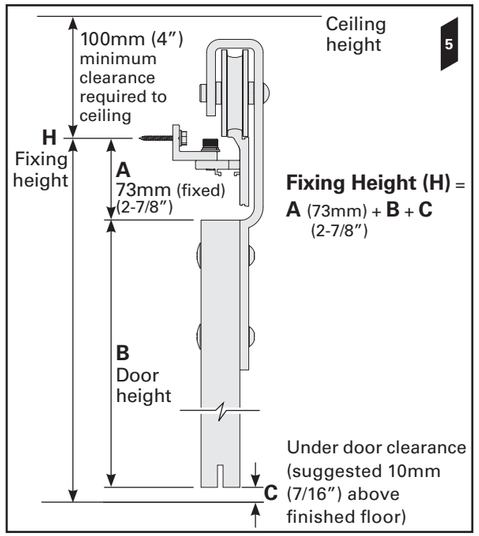

6. Mark central fixing point (**X**).

If there are two mounting brackets supplied: measure a bracket from one end to the centre and mark this dimension as '**Y**' in both directions from point **X** as shown in the diagram. These are the fixing points for two brackets.

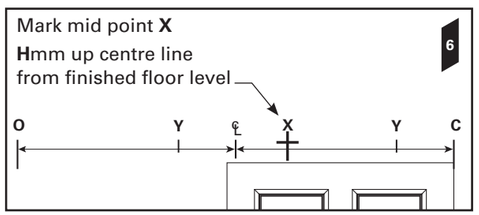

Fix track bracket to wall

7. Drill a ø3.5mm (1/8") hole, 50mm (2") deep into the wall on point **X**.

Using this hole, screw the centre hole of the track bracket on to the wall using the #8 screws supplied.

If the track is longer than 3.65m (12') you will have been supplied with two mounting brackets. Drill two ø3.5mm (1/8") holes, 50mm (2") deep into the wall on points **Y** (instead of point **X**).

Use these holes to screw the centre holes of the track brackets on to the wall using the #8 screws supplied.

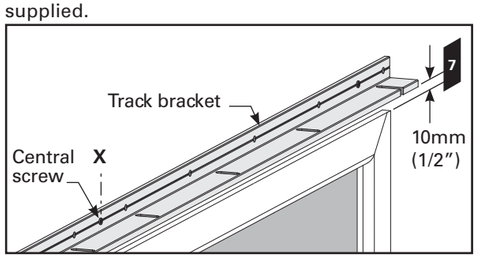

Note: There must be a 10mm (1/2") gap below the bottom of the mounting bracket. Cut architrave if required.

Level track bracket(s) by pivoting around central screw(s).

Lock in place with two outer screws. The ends of double brackets should be touching. We recommend you clamp them together to keep them aligned for the next step.

Pre-drill and fix track bracket

8. Pre-drill through the centre of all mounting holes with a ø3.5mm (1/8") drill bit to help centre the coach screws. Start with the ends so that you can level bracket and fasten it before continuing with the rest.

The bracket(s) must be fixed to solid timber with coach screws. If the pre-drilled mounting holes don't align with a head joist or stud, additional ø7mm (9/32") holes should be drilled along the guide channel.

All of the supplied coach screws must be used.

Do not drill within 15mm (5/8") of the adjustment slots or the coach screw will interfere with track adjustment.

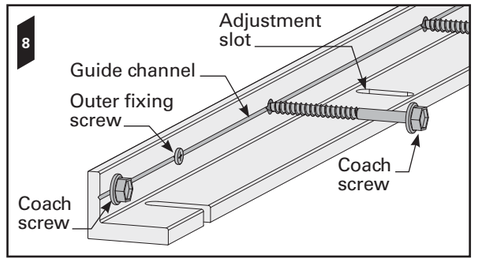

9. Place track onto the bracket(s) and immediately fix the track to the bracket with bolts and washers to ensure track does not fall off. **Do not fully tighten bolts yet**.

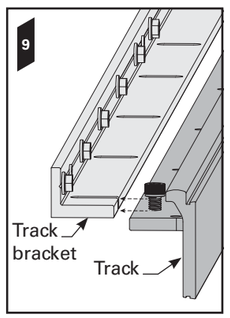

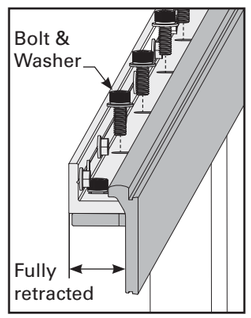

Extend and tighten

10. Adjust track to fully extended position and tighten the bolts.

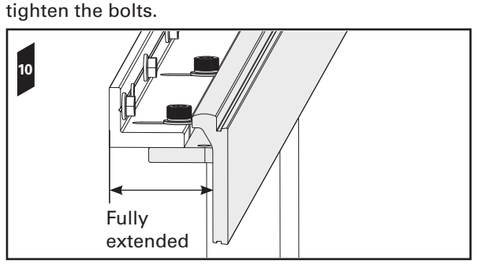

Position hangers

11. Place hangers on door and decide offset of hanger from edge of door (*X*). Use a square to mark a line on both outer edges.

Bi-Parting Doors: Minimum distance (*X*) is 65mm (2-1/2").

Heavy Doors: Over 180kg (400lb) require three hanger brackets or contact CS for a customised solution.

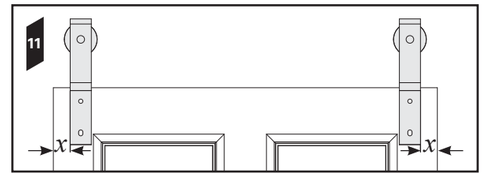

12. Hold hangers to door, aligning edge **A** with top of door and edge **B** with marked line.

Clamp in place and mark centre of **Hole 1** and **Slot 2** onto face of door for drilling reference.

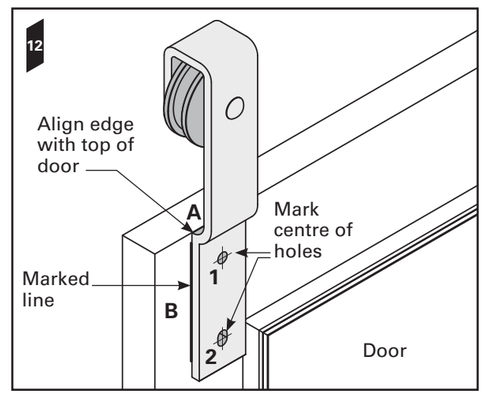

Fasten hangers to door

13. Pre-drill through door using ø8mm (5/16") drill bit. Ensure holes are perpendicular to front face of door. Drill out with ø12mm (15/32") drill.

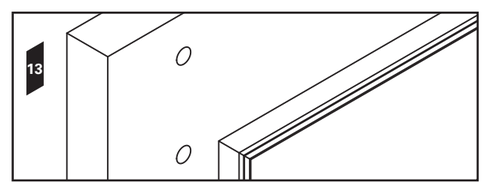

14. Check alignment of hanger and fasten to door with door bolts supplied. Do not over-tighten.

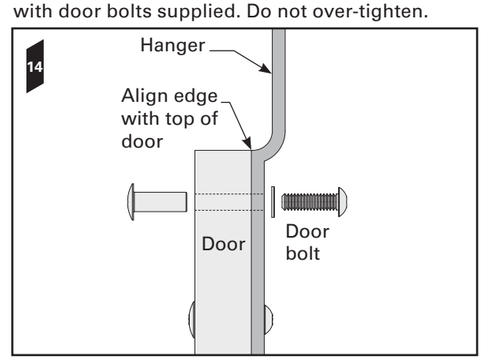

If you are installing SofStop, follow steps 20-21, Page 4 to fit the activator to the top of the door.

Adjust track offset

15. Before lifting the door onto the track, check the clearance. Loosen all bolts one turn and adjust the track so that the door will be at the desired offset from the wall.
Re-tighten bolts.

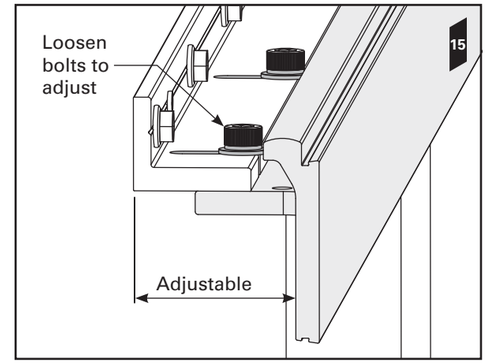

Lift door onto track

16. Lift the door onto the track.

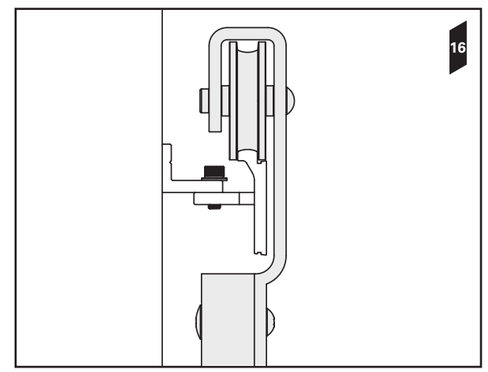

Check T-Guide position

17. Ensure the T-Guide is between point **C** and **O** marked on the floor and the desired distance away from the wall.

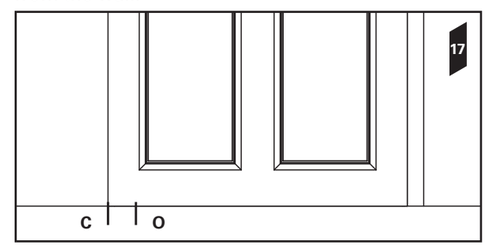

18. Roll door back far enough to mount T-Guide. If this means rolling off the end of the track, ensure door weight is supported using a block.

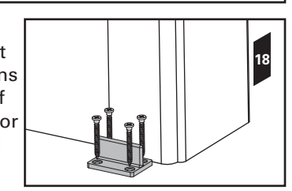

Position stops

19. Move door to the open position.

Position rubber part of stop against hanger as shown.

Remove cover on top of stop and firmly tighten cap screws to lock stop in place.

For even clamping, start with the centre screw and tighten gradually and sequentially. Replace cover.

Close the door and repeat for the other stop.

If you are installing SofStop, turn to Page 4.

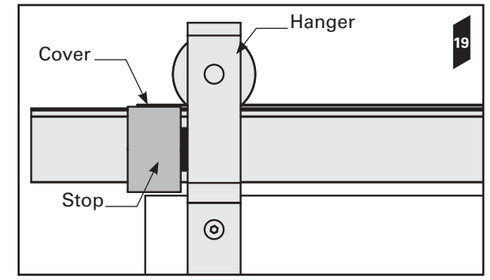

Heavy Doors (over 100kg / 220lb)

The standard stop setting of 50mm (2") at the end of the track can be reduced on doors under 100kg (220lb).

Doors over 100kg (220lb) must be set to keep the hanger fully supported.

If tracks are shortened they should be shortened equally from both ends so that the unsupported area is equally reduced. This is particularly important for heavy doors up to 180kg (400lb).

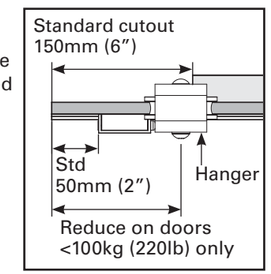

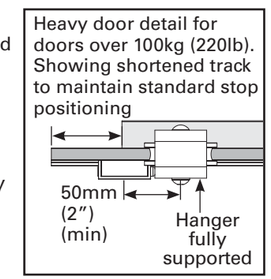

A heavy door may distort the hanger under load. If you are using a heavy door, preload/offset the hanger by applying firm pressure with the palm of your hand to the top of the hanger while it is fitted to the door.

The hanger will bend easily at the specially designed radiused area where it meets the top of the door. The hanger will then hang straight under load.

100kg (220lb) door: offset 1mm (3/64")
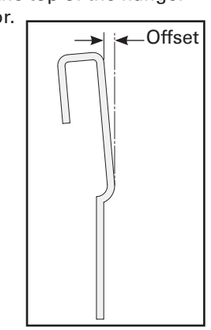
180kg (400lb) door: offset 2mm (5/64")